Profec Repair socket PVC-U 63 mm glue socket 10bar grey (7040183)

PROFEC

bosta
bringing water to life

TECHNICAL SPECIFICATIONS

Colour	grey
Material	PVC-U
Connection	glue socket
Pressure	10 bar
Size	63 mm

DIMENSIONS

L	123 mm
ØDi-1	63 mm
ØDi-2	63 mm

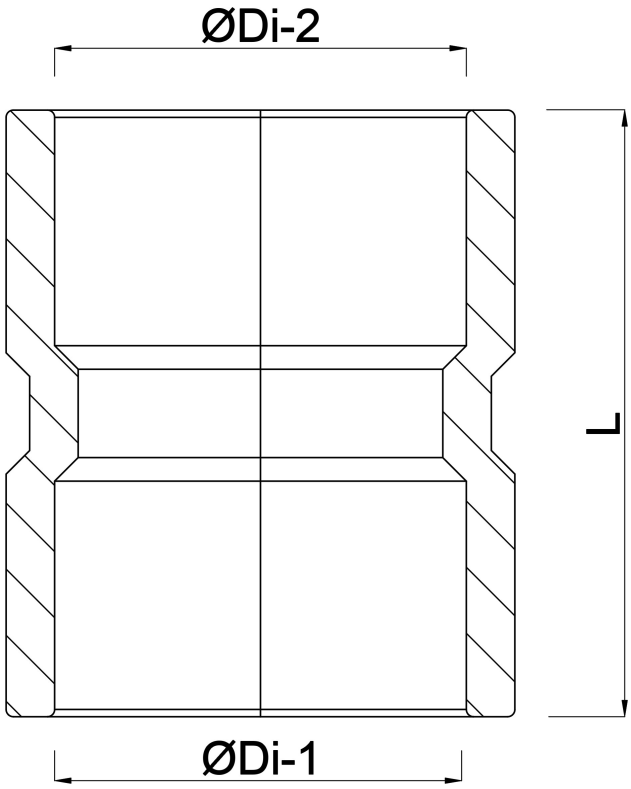

Last modified date: 04/09/2026

Bosta UK Ltd.
Reflection House
Olding Road
Bury St. Edmunds
Suffolk
IP33 3TA
T +44 (0) 1284 716580
E enquiries@bosta.co.uk
http://www.bosta.com

bosta
bringing water to life