Profec Nr. 330 Union coupler cast iron galvanised 2 1/2" female thread 25bar DVGW type flat (1033010)

PROFEC

bosta
bringing water to life

TECHNICAL SPECIFICATIONS

Type	flat
Material	Cast iron
Surface treatment	galvanised
Approval	DVGW
Connection	female thread
Fitting nr.	Nr. 330
Pressure	25 bar
Size	2 1/2"
Length	88 mm

DIMENSIONS

F-1	25 mm
F-2	25 mm
K-1	84 mm
K-2	84 mm
Kn	108 mm
L	86 mm

ØDi-1	2 1/2 "
ØDi-2	2 1/2 "

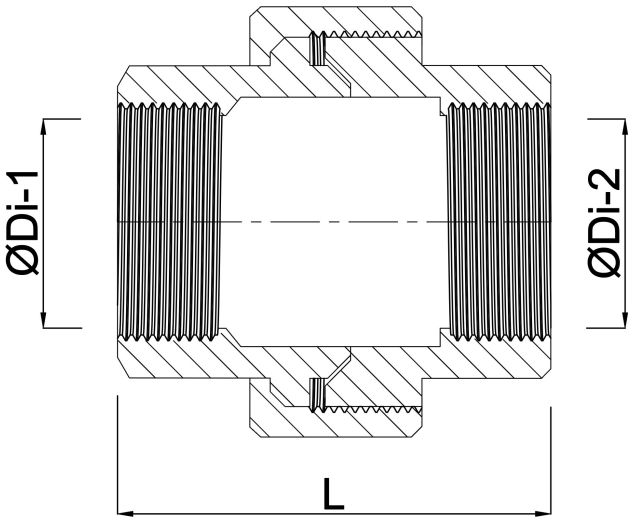

Last modified date: 05/09/2026

Bosta UK Ltd.
Reflection House
Olding Road
Bury St. Edmunds
Suffolk
IP33 3TA
T +44 (0) 1284 716580
E enquiries@bosta.co.uk
http://www.bosta.com

bosta
bringing water to life